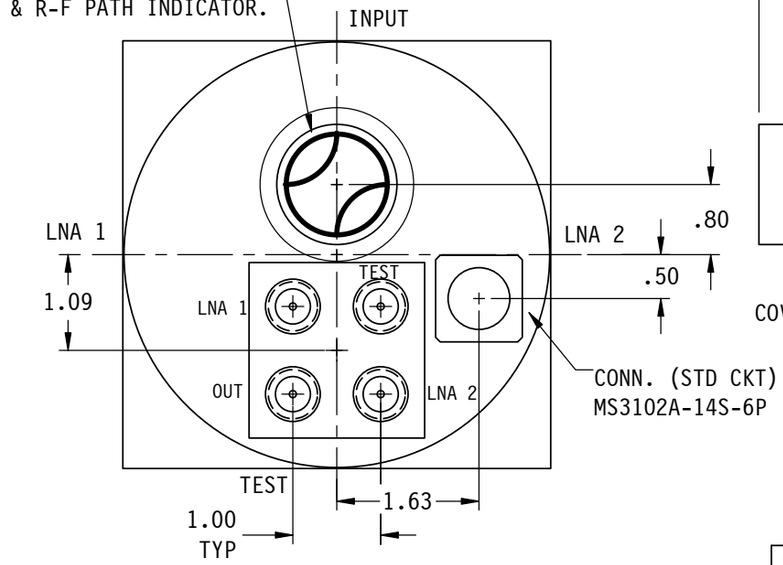


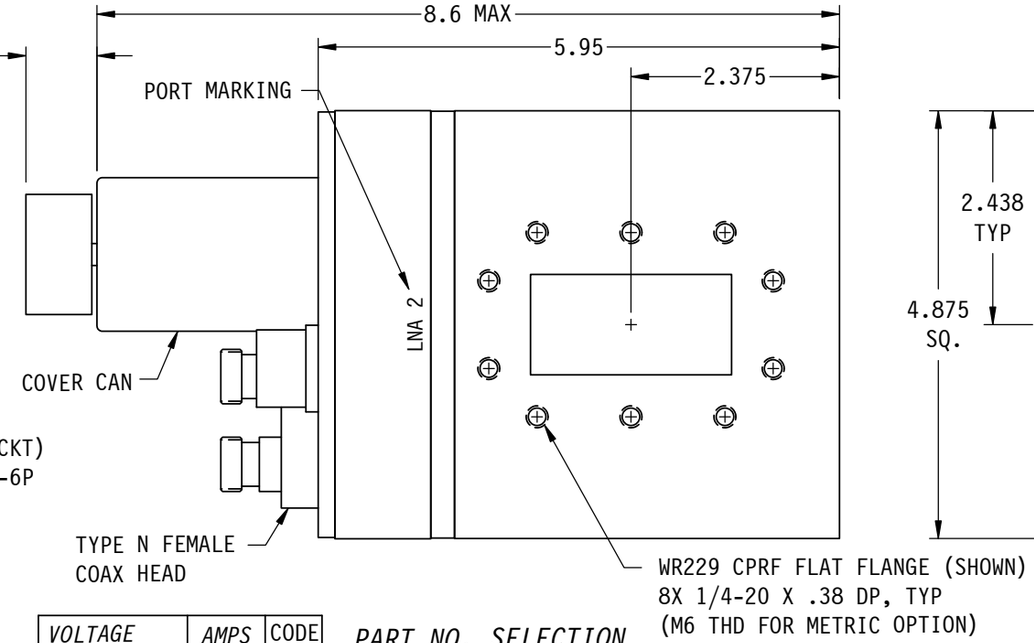


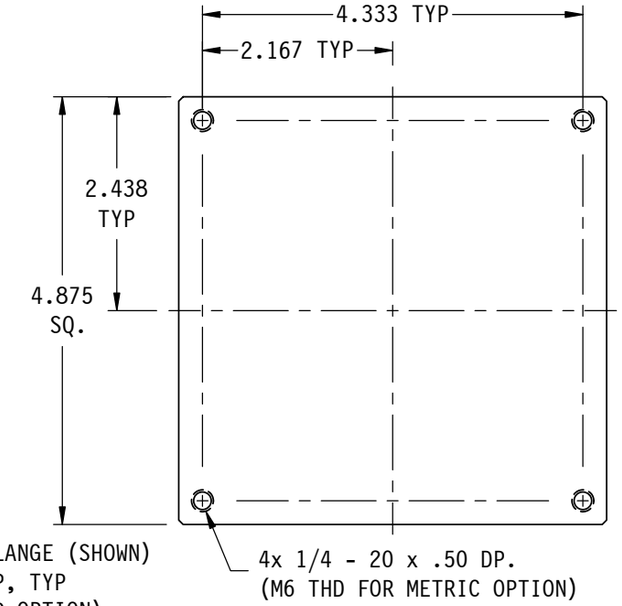


2NxxW SERIES

SPECIFICATIONS:

| | WG | COAX |
|---|---|---|
| FREQ RANGE | 3.7 TO 4.2 GHz | 3.7 TO 4.2 GHz |
| VSWR | 1.04 : 1 MAX | 1.25 : 1 MAX |
| INSERTION LOSS | 0.01 db MAX | 0.25 db MAX |
| ISOLATION | 90 db MIN | 60 db MIN |
| SWITCHING TIME | 100 mSec, TYP | |
| PRESSURE | 15 PSIG (R-F HEAD ONLY) | |
| MATERIAL | ALUMINUM | |
| LIFE | 100,000 CYCLES, MIN. | |
| FINISH | IRIDITE FOR FLANGES AND SATIN BLACK ENAMEL FOR REST OF BODY. | |

NOTES:
1. ** MANUAL SWITCH DOES NOT INCLUDE RECEPTACLE.
2. BLUE BOXES ARE REQUIRED FIELDS.
3. !! IF OPTION IS NOT REQUIRED, LEAVE (GOLD BOX) BLANK.
4. IF DIFFERENT FREQ RANGE IS REQUIRED, CONTACT COMPANY.

| VOLTAGE | AMPS | CODE |
|---|---|---|
| +22 TO +32 | 2 | A |
| -22 TO -32 | 2 | B |
| +10 TO +14 | 2 | C |
| -10 TO -14 | 2 | D |
| +44 TO +54 | 1 | E |
| -44 TO -54 | 1 | F |
| 117VAC | 0.5 | H |
| 235VAC | 0.5 | K |
| MANUAL ** | | M |

## PART NO. SELECTION

| CODE | FLANGE |
|---|---|
| F | CPRF |
| G | CPRG |

| CODE | !! OPTION |
|---|---|
| M | METRIC THREAD |

(USED IN A SHELTERED ENVIRONMENT)

| CODE | ENVIRONMENTAL |
|---|---|
| W | SHELTERED |

| | |
|---|---|
| PART NO. SERIES | 2N CODE |
| SPDT !! OPTION | 1 CODE |

2N [ ] [ ] [ ] [ ] W [ ]

!! ELECTRICAL CIRCUIT (IF OTHER THAN STD.) SEE SCHEMATIC PAGE

PART NO. EX.: 2NAFMW2

WR229 DUAL WG/TYPE N SWITCH, +28VDC, CPRF (FLAT) FLANGE, METRIC THDS, SHELTERED, CKT #2.

WEB SITE: www.sectormicrowave.com

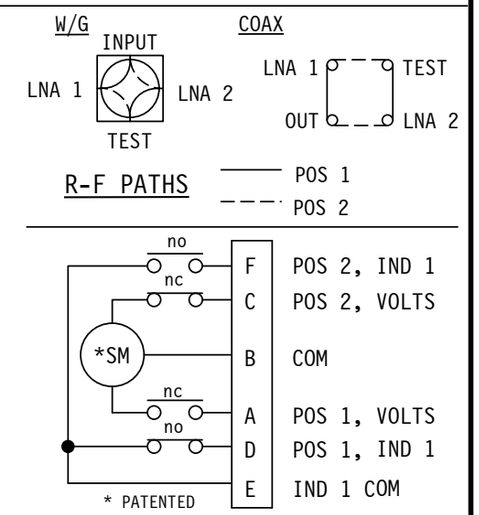


STD. ELECTRICAL CKT.
Shown in Position 1

| ZONE | LTR | DESCRIPTION | APV | DATE |
|---|---|---|---|---|
| | A | RELEASED. | S.W. | 9/8/98 |

REVISIONS

TOLERANCES:
DECIMALS
2 PLACES: +/- .03
3 PLACES: +/- .010
FRACTIONS: +/-1/32
ANGLES: +/- 1/2 deg.

| | | |
|---|---|---|
| DRAWN | A.C. | 9/8/98 |
| CHECKED | | |
| APVD | S.W. | 9/8/98 |
| APVD | | |

# SECTOR MICROWAVE IND., INC.

WR229, W/G COAX DUAL SHELTERED SW.

SIZE L | CAGE CODE 53263 | 2NxxW SERIES | A

SCALE: 1/2 | UNIT WT. | SHEET 1 OF 1 | REV.