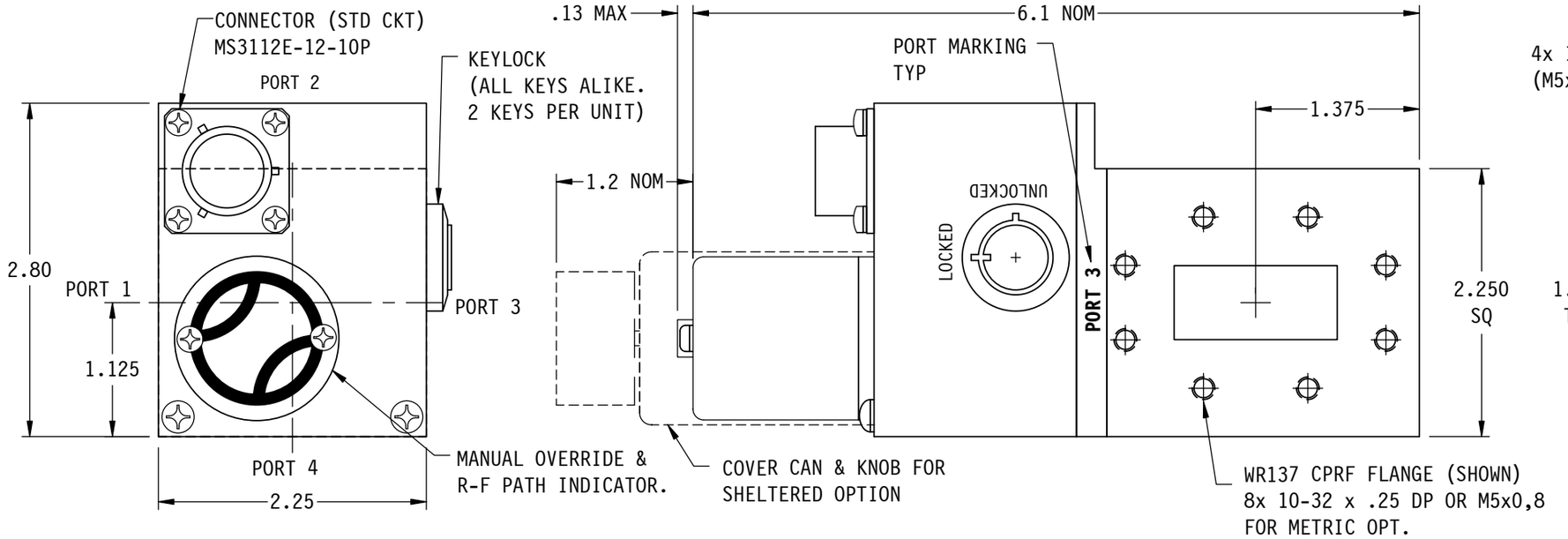

3xxLxx LOCKING SER.

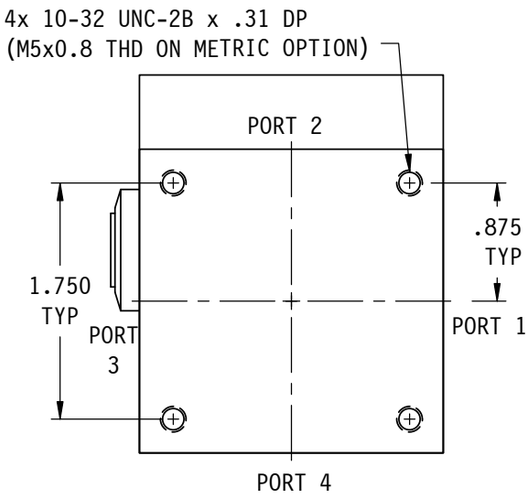

SPECIFICATIONS:

FREQ RANGE	5.85 TO 8.20 GHz
VSWR	1.05 : 1 MAX
INSERTION LOSS	0.02 db MAX
ISOLATION	60 db MIN
SWITCHING TIME	60 mSEC, TYP
PRESSURE	TO 30 PSIG (R-F HEAD)
FINISH	IRIDITE ON FLANGES, SATIN BLACK ENAMEL ON REST OF BODY.

NOTES:
1. ** MANUAL SWITCH DOES NOT INCLUDE RECEPTACLE.
2. BLUE BOXES ARE REQUIRED FIELDS.
3. !! IF OPTION IS NOT REQUIRED, LEAVE (GOLD BOX) BLANK

PART NO. SELECTION

VOLTAGE	*AMPS*	CODE
+22 TO +32	*0.9*	A
-22 TO -32	*0.9*	B
+10 TO +14	*1.5*	C
-10 TO -14	*1.5*	D
+44 TO +54	*0.5*	E
-44 TO -54	*0.5*	F
117VAC	*0.5*	H
235VAC	*0.5*	K
*MANUAL ***		M

CODE	*FLANGE*
F	*CPRF*
G	*CPRG*
M	*CMR*

	CODE
LOCKING	L

CODE	*SW. LOCKED IN POSITION*
1	*POS. 1*
2	*POS. 2*
3	*POS. 1 & 2*

CODE	*KEY REMOVABLE*
1	*LOCKED POS.*
2	*LOCKED & UNLOCKED POS.*

!! ELECTRICAL CIRCUIT (IF OTHER THAN STD.)

CODE	*!! OPTION*
1	*SPDT*

3	
PART NO. SERIES	3
CODE	

METRIC THREAD !! OPTION	M
	CODE

W	*SHELTERED !! OPTION*
CODE	

(USED IN A SHELTERED ENVIRONMENT)

L

(PART NO. EX.) 3-AFML32
WR137 W/G SW., +28VDC, CPRF (FLAT) FLANGE, METRIC THD's, LOCKING, BOTH POSITIONS WITH KEY REMOVABLE IN LOCKED & UNLOCKED POS.

FOR OTHER ELECT CKT's SEE SCHEMATIC PAGE.

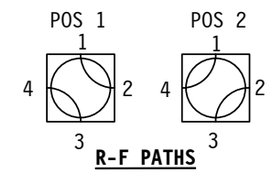

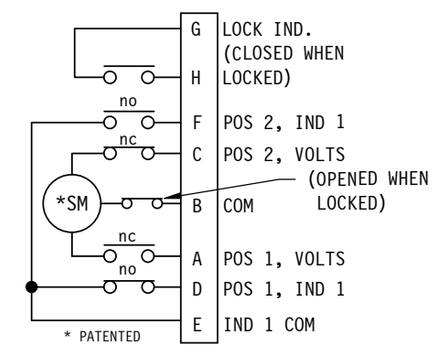

STD. ELECTRICAL CKT. (with lock ind.)
Shown in Position 1
ONE FORM C

WEB SITE: www.sectormicrowave.com

ZONE	LTR	DESCRIPTION	APV	DATE
	A	RELEASED.	RR	1/28/04

REVISIONS

TOLERANCES:
DECIMALS
2 PLACES: +/- .03
3 PLACES: +/- .010
FRACTIONS: +/-1/64
ANGLES: +/- 1/2 deg.

DRAWN	A.C.	1/28/04
CHECKED		
APVD	R.R.	1/28/04
APVD		

SECTOR MICROWAVE IND., INC.

WR137 W/G SWITCH, LOCKING SERIES

SIZE	MFG CODE			
L	53263	3xxLxx LOCKING SERIES		A
SCALE: NONE	UNIT WT.	SHEET 1 OF 1		REV.