HN-xxS SERIES

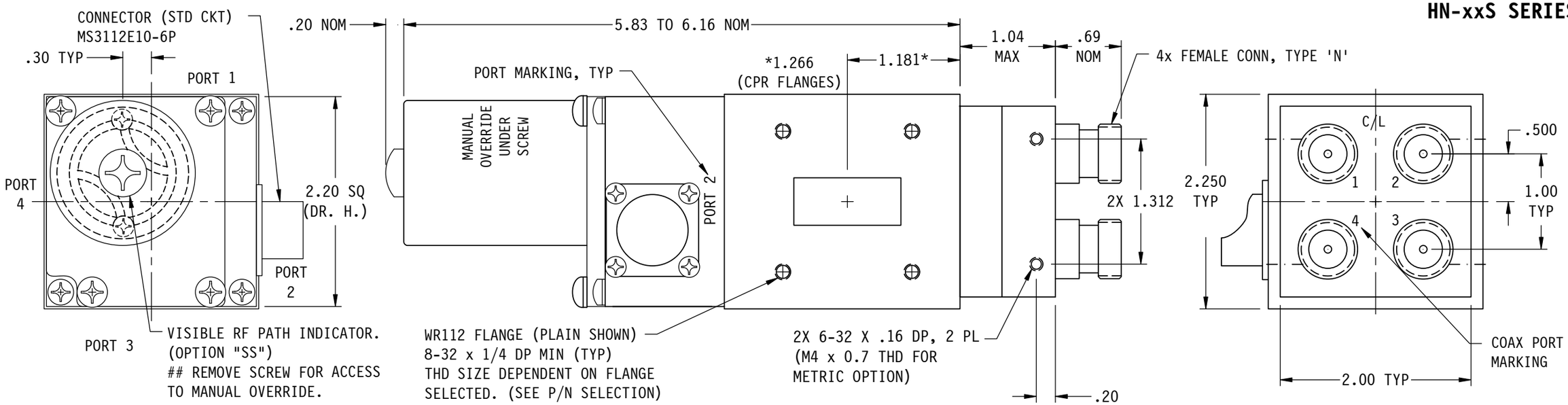

SPECIFICATIONS;	W/G	COAX
FREQ RANGE	7.05 - 10.0 GHz	7.05 TO 8.50
VSWR	1.05 : 1 Typ (1.08:1 Max)	1.3 : 1 Max.
INSERTION LOSS	0.05 db, Max.	0.3 db, Max.
ISOLATION	60 db, Min.	60 db, Min.
RF POWER	5KW AVG	100W Max.
SWITCHING TIME	60 mSec, Typ.	
PRESSURE	To 30 PSIG	
FINISH	IRIDITE ON FLANGE FACES, SATIN BLACK FINISH	

NOTES:
1. ** MANUAL SWITCH DOES NOT INCLUDE RECEPTACLE.
2. BLUE BOXES ARE REQUIRED FIELDS.
3. !! IF OPTION IS NOT REQUIRED, LEAVE (GOLD BOX) BLANK

PART NO. SELECTION

VOLTAGE	AMPS	CODE
+22 TO +32	0.9	A
-22 TO -32	0.9	B
+10 TO +14	1.5	C
-10 TO -14	1.5	D
+44 TO +54	0.5	E
-44 TO -54	0.5	F
117VAC	1.2	H
235VAC	0.5	K
MANUAL **		M

CODE	FLANGE
P	PLAIN
C	CHOKE
O	O-RING
F	CPRF
G	CPRG

CODE	!! OPTION
M	METRIC THREAD

CODE	ENVIRONMENTAL
S	SEALED
SS	## SEALED WITH REMOVABLE SCREW

TOP EXTERIOR SCREW CAN BE REMOVED ALLOWING ACCESS TO MANUAL OVERRIDE. No. 1 PHILLIPS SCREWDRIVER REQUIRED.

	HN-
PART NO. SERIES	HN-
	CODE

SPDT	1
!! OPTION	CODE

!! ELECTRICAL CIRCUIT (IF OTHER THAN STD.) SEE SCHEMATIC PAGE

PART NO. EX.: HN-APMS2

WR112 WG/TYPE N COAX SWITCH, +28VDC, PLAIN FLANGE, METRIC THDS., SEALED, CKT #2

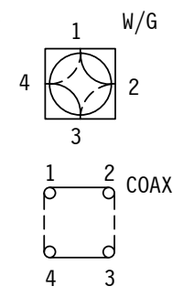

R-F PATHS

——— POS 1

- - - - POS 2

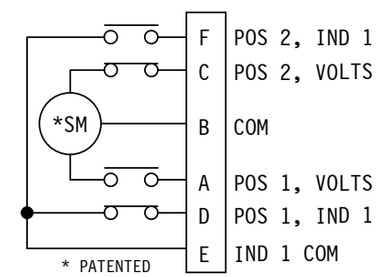

STD. ELECT. CKT.
Shown in Pos. 1
ONE FORM C

WEB SITE: www.sectormicrowave.com

ZONE	LTR	DESCRIPTION	APV	DATE
	B	ADDED MTG HOLES ON COAX SECTION	TN	12/20/06
	A	RELEASED	RR	1/28/04

REVISIONS

TOLERANCES:
DECIMALS
2 PLACES: +/- .03
3 PLACES: +/- .010
FRACTIONS: +/-1/64
ANGLES: +/- 1/2 deg.

DRAWN	J TRACY	1/28/04
CHECKED		
APVD	RR	1/28/04
APVD		

SECTOR MICROWAVE IND., INC.

WR112 WG/TYPE N COAX, SEALED SW. SER.

SIZE L	MFG CODE 53263	HN-xxS SERIES	B
SCALE: NONE	UNIT WT.	SHEET 1 OF 1	REV.